REVISION TABLE				
REV	CHANGE NO.	DESCRIPTION	DATE	APPROVAL
F.00	00	Changed PLC 1211 to 1212 and added additional options	3/10/2020	NBS
F.01	00	Revised PLC outputs 0.4 & 0.5. Added clarification about field wiring alarm devices. Added identification to devices.	8/6/2020	NBS
F.02	00	Replaced dew point alarm output with Repress Solenoid (RV)	10/12/2020	NBS

XCP ELECTRICAL SCHEMATIC

WIRING METHODS

120VAC = RED
NEUTRAL = WHITE
24VDC = BLUE
24V COMMON = WHITE/BLUE
GROUND = GREEN
(SEE NEC TABLE 310.15 (B)(16) FOR WIRE GAUGES)

ELECTRICAL INFORMATION

120VOLT/1PHASE/60HZ
TOTAL SYSTEM AMPS= 0.77A
TOTAL SYSTEM W= 43.54 W

SCHEMATIC TYPICAL INDEX

POWER DISTRIBUTION/BRANCH CIRCUITS
PLC BASE UNIT INPUT/OUTPUTS
TERMINAL LAYOUTS

CAT: 02S
ID# 0001218
SAP:
FINISH
MATERIAL
INV. CONTROLLED:
SERIAL TRACKED:
DRAWN BY: NBS 9/13/18

TITLE: XCp Wiring Diagram
DESCRIPTION: Wiring diagram for heatless desiccant dryers.
SHEET 1 OF 6
SIZE: B
SCALE:
REVISION: F.02

UNLESS OTHERWISE SPECIFIED:
DIMENSIONS ARE IN INCHES
TOLERANCES:
LINEAR ±1/4
ANGULAR ±2
DENOTES INSPECTION DIM
DO NOT SCALE DRAWING

900 Great SW Pkwy
Atlanta, GA 30336
Ph: (800) 235-6797
Fax: (404) 629-6666
www.bekousa.com
BEKO TECHNOLOGIES CORP

PROPRIETARY AND CONFIDENTIAL
THE INFORMATION CONTAINED IN THIS DRAWING IS THE SOLE PROPERTY OF BEKO TECHNOLOGIES CORP. ANY REPRODUCTION IN PART OR AS A WHOLE WITHOUT THE WRITTEN PERMISSION OF THE AFOREMENTIONED IS PROHIBITED.

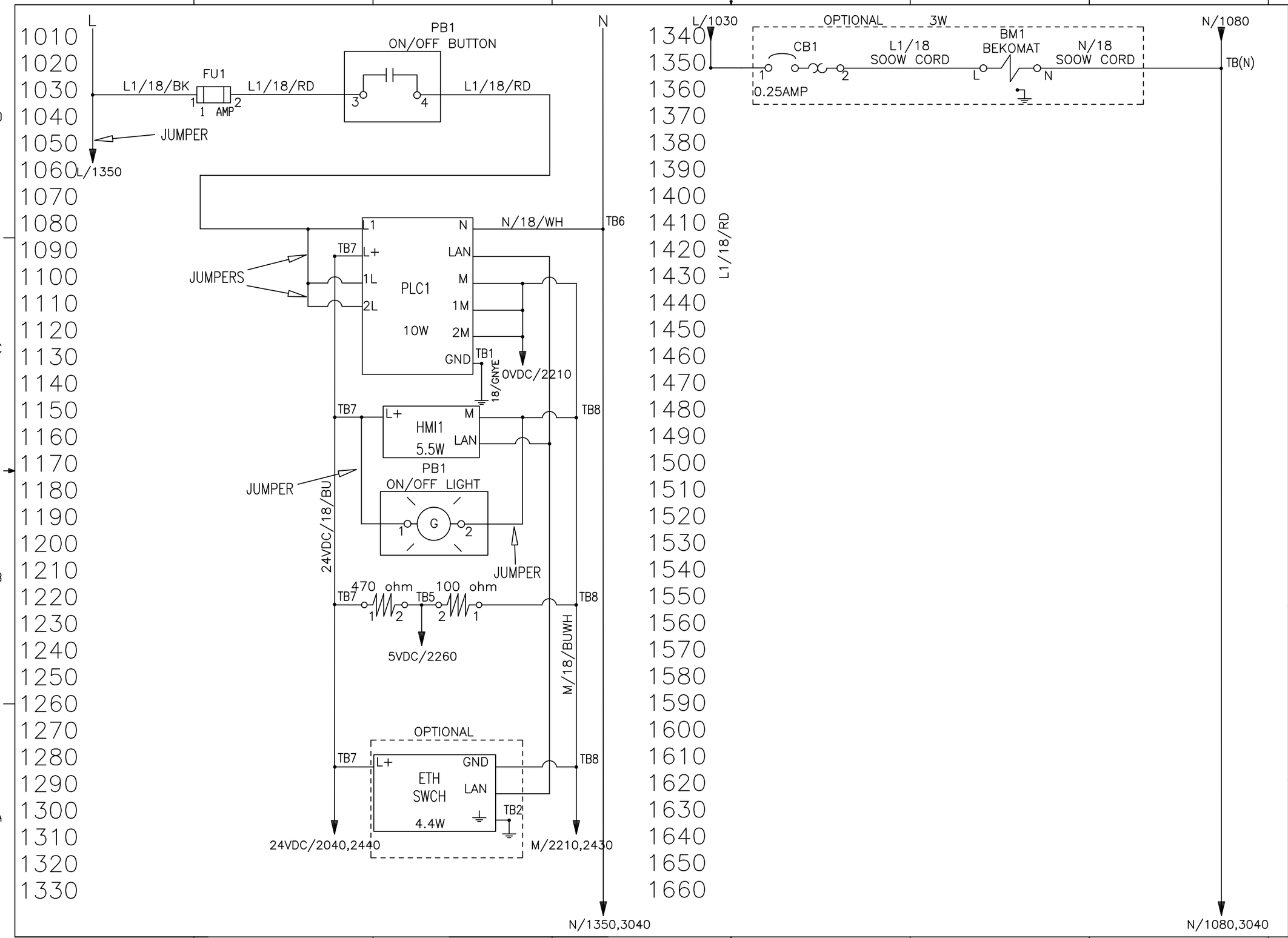

ID#	0001218
CAT:	02S
TITLE:	XCp Wiring Diagram
DESCRIPTION:	Wiring diagram for heatless desiccant dryers.
SHEET	2 OF 6
SCALE:	
SIZE:	B
SAP:	
REVISION:	F.02
FINISH	
MATERIAL	
INV. CONTROLLED:	
SERIAL TRACKED:	
DRAWN BY:	NBS 9/13/18

UNLESS OTHERWISE SPECIFIED:
DIMENSIONS ARE IN INCHES
TOLERANCES:
LINEAR±1/4
ANGULAR ±2
DENOTES INSPECTION DIM
DO NOT SCALE DRAWING

BEKO TECHNOLOGIES CORP
900 Great SW Pkwy
Atlanta, GA 30336
Ph: (800) 235-6797
Fax: (404) 629-6666
www.bekousa.com

PROPRIETARY AND CONFIDENTIAL
THE INFORMATION CONTAINED IN THIS DRAWING IS THE SOLE PROPERTY OF BEKO TECHNOLOGIES CORP. ANY REPRODUCTION IN PART OR AS A WHOLE WITHOUT THE WRITTEN PERMISSION OF THE AFOREMENTIONED IS PROHIBITED.

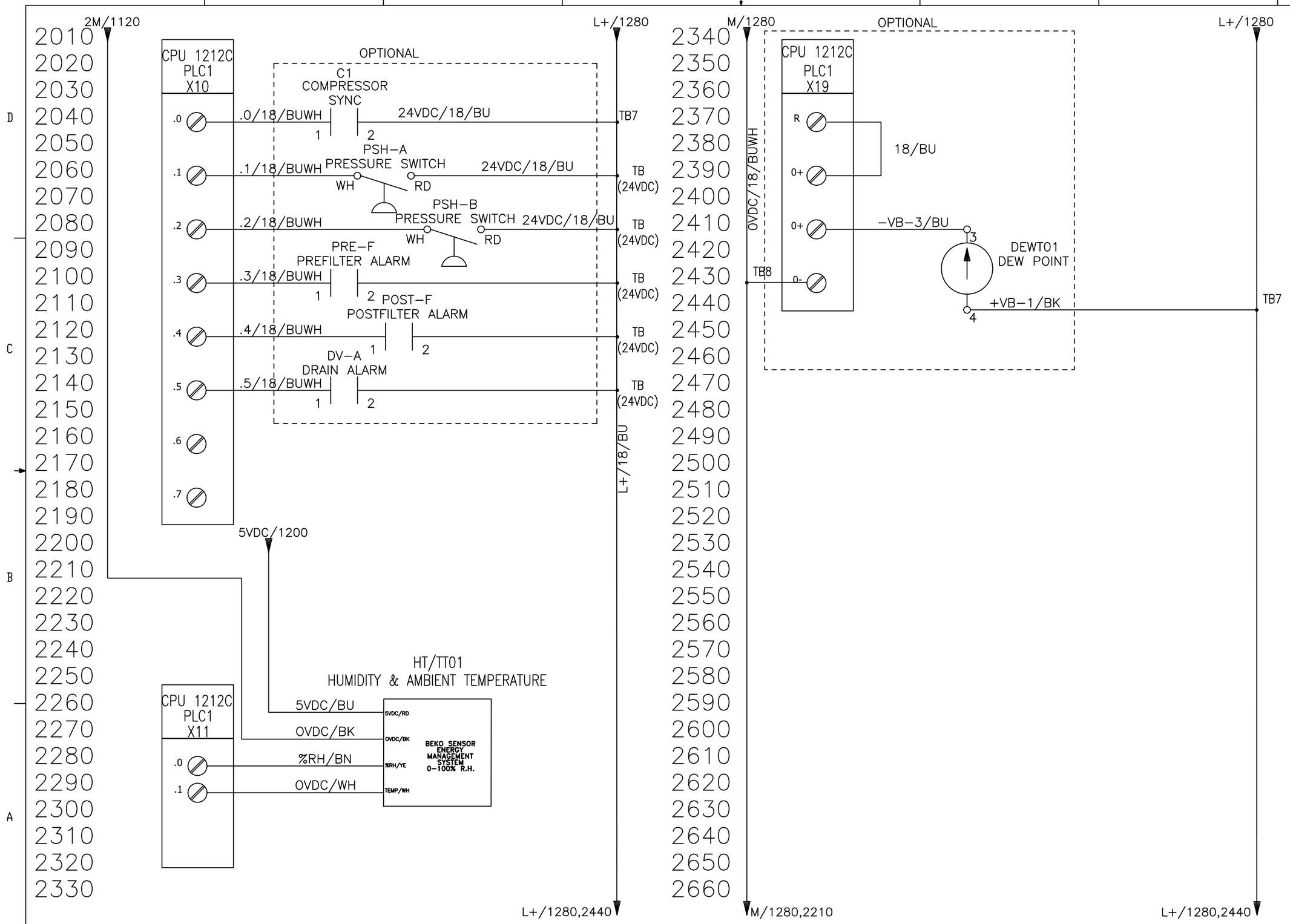

CAT: 02S	ID# 0001218
TITLE: XCp Wiring Diagram	
DESCRIPTION: Wiring diagram for heatless desiccant dryers.	
SHEET 3 OF 6	
SCALE:	
SIZE: B	
REVISION: F.02	
SAP:	
FINISH	
MATERIAL	
INV. CONTROLLED:	
SERIAL TRACKED:	
DRAWN BY: NBS 9/13/18	

UNLESS OTHERWISE SPECIFIED:
DIMENSIONS ARE IN INCHES
TOLERANCES:
LINEAR ±1/4
ANGULAR ±2
DENOTES INSPECTION DIM
DO NOT SCALE DRAWING

900 Great SW Pkwy
Atlanta, GA 30336
Ph: (800) 235-6797
Fax: (404) 629-6666
www.bekousa.com
BEKO TECHNOLOGIES CORP

PROPRIETARY AND CONFIDENTIAL
THE INFORMATION CONTAINED IN THIS DRAWING IS THE SOLE PROPERTY OF BEKO TECHNOLOGIES CORP. ANY REPRODUCTION IN PART OR AS A WHOLE WITHOUT THE WRITTEN PERMISSION OF THE AFOREMENTIONED IS PROHIBITED.

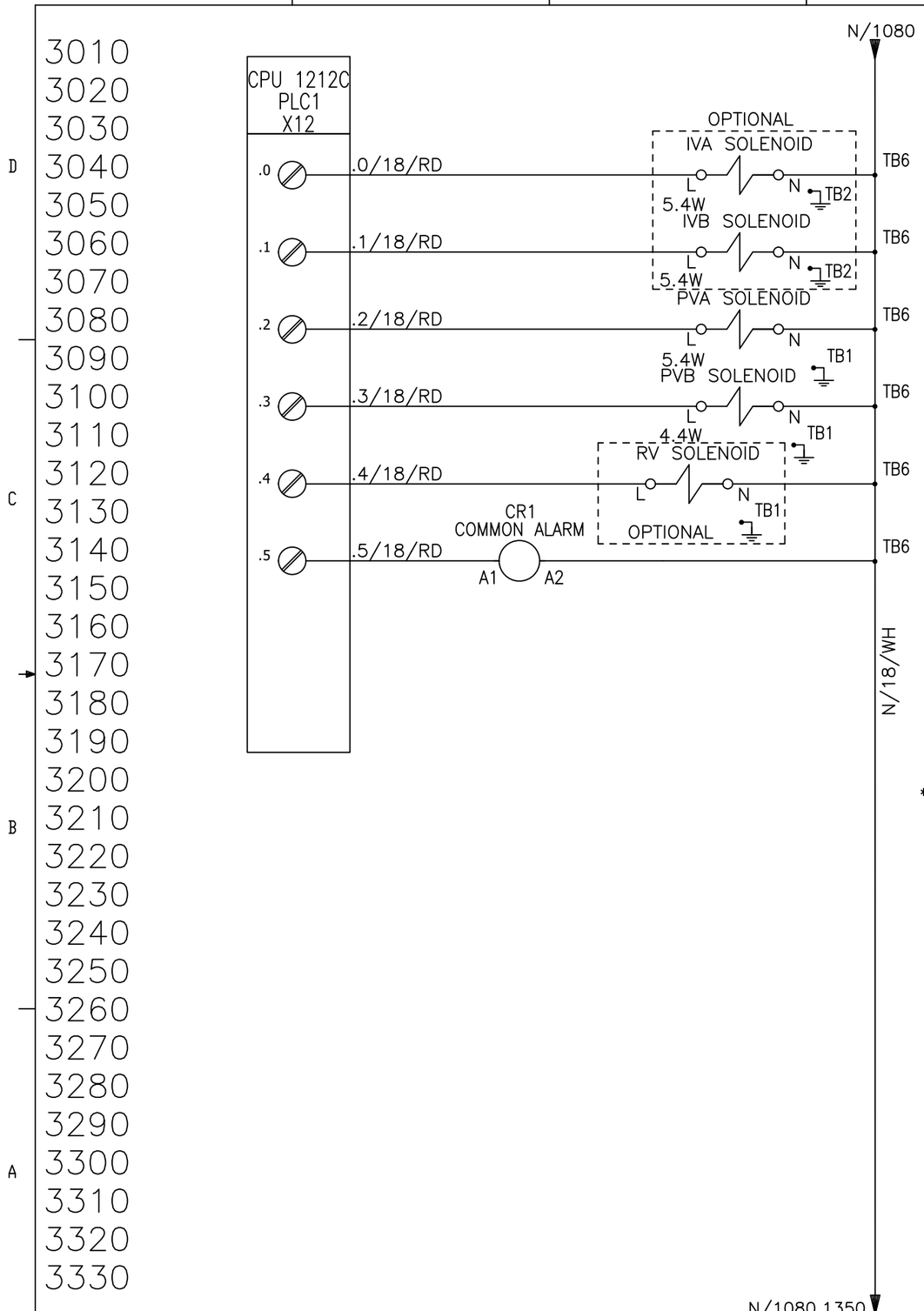

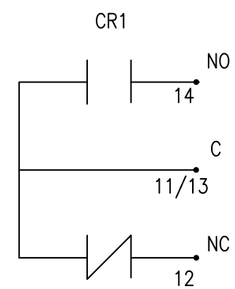

* RELAY ENERGIZED = POWER ON & NO TROUBLE

250V AC/DC MAX PROVIDED BY CUSTOMER
FOR FIELD DEVICES

ID#	0001218
CAT:	02S
SAP:	
FINISH	
MATERIAL	
TITLE:	XCp Wiring Diagram
DESCRIPTION:	Wiring diagram for heatless desiccant dryers.
REVISION:	F.02
SHEET	4 OF 6
SCALE:	
SIZE:	B

UNLESS OTHERWISE SPECIFIED:
DIMENSIONS ARE IN INCHES
TOLERANCES:
LINEAR±1/4
ANGULAR ±2
DENOTES INSPECTION DIM
DO NOT SCALE DRAWING

BEKO TECHNOLOGIES CORP
900 Great SW Pkwy
Atlanta, GA 30336
Ph: (800) 235-6797
Fax: (404) 629-6666
www.bekousa.com

INV. CONTROLLED:
SERIAL TRACKED:
DRAWN BY: NBS 9/13/18

PROPRIETARY AND CONFIDENTIAL
THE INFORMATION CONTAINED IN THIS DRAWING IS THE SOLE PROPERTY OF BEKO TECHNOLOGIES CORP. ANY REPRODUCTION IN PART OR AS A WHOLE WITHOUT THE WRITTEN PERMISSION OF THE AFOREMENTIONED IS PROHIBITED.

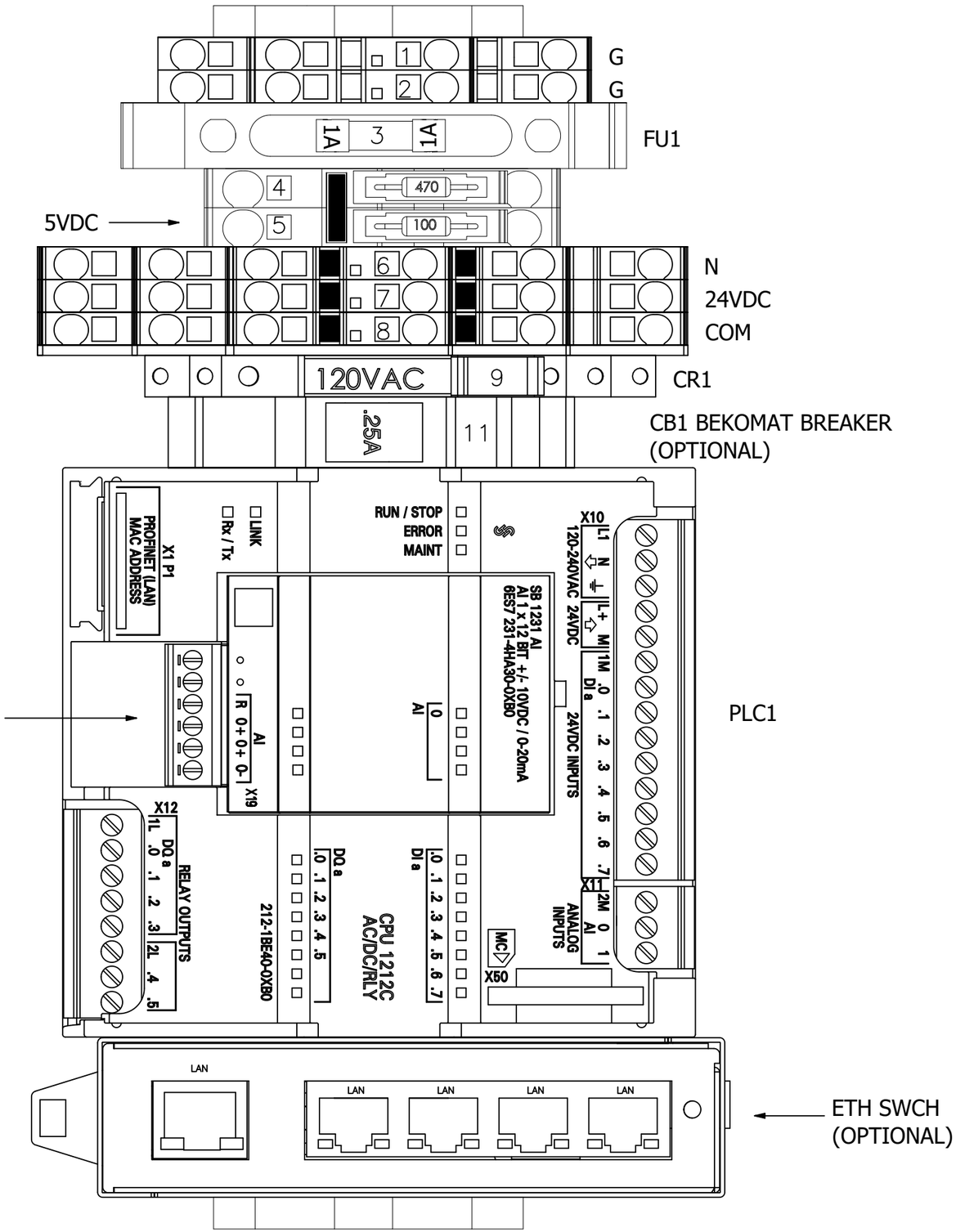

INV. CONTROLLED:	SAP:	CAT: 02S	ID# 0001218
SERIAL TRACKED:	REVISION: F.02	TITLE: XCp Wiring Diagram	
DRAWN BY: NBS 9/13/18	UNLESS OTHERWISE SPECIFIED: DIMENSIONS ARE IN INCHES TOLERANCES: LINEAR±1/4 ANGULAR ±2 DENOTES INSPECTION DIM	DESCRIPTION: Wiring diagram for heatless desiccant dryers.	
	DO NOT SCALE DRAWING	SIZE:B	SCALE:
MATERIAL	FINISH		SHEET 5 OF 6

BEKO TECHNOLOGIES CORP
900 Great SW Pkwy
Atlanta, GA 30336
Ph: (800) 235-6797
Fax: (404) 629-6666
www.bekousa.com

PROPRIETARY AND CONFIDENTIAL
THE INFORMATION CONTAINED IN THIS DRAWING IS THE SOLE PROPERTY OF BEKO TECHNOLOGIES CORP. ANY REPRODUCTION IN PART OR AS A WHOLE WITHOUT THE WRITTEN PERMISSION OF THE AFOREMENTIONED IS PROHIBITED.

TERMINAL BLOCK DIAGRAM

BOTTOM	COLOR		MIDDLE	COLOR		TOP	COLOR		TERMINALS			COLOR	TOP		COLOR	MIDDLE			COLOR	BOTTOM
Supply - Gnd	GN	○				PVA-G	GN	○	TB1 (Ground)	□	○	GN	PVB-G				□	○	GN/YE	PLC X10 - Ξ
EthSwch - Ξ	GN/YE	○				RV-G	GN	○	TB2 (Ground)	□	○	GN	IVB-G				□	○	GN	IVA-G
Supply - L TB9-Bottom	BK BK	○	1 Amp Fast Acting Fuse						TB3									○	RD	PB1-3
	BU		470 OHM RESISTOR BLOCK						TB4									○	BU	TB7-Middle
HT/TT01-5V	BU/WH		100 OHM RESISTOR BLOCK						TB5									○	BU/WH	TB8-Middle
Supply - N	WH	○	PVA-N	WH	○	PVB-N	WH	○	TB6 (N)		○	WH	IVA-N		○	WH	IVB-N	○	WH	X10 - N
HMI X80-L+	BU	○	TB470ohm-BOT	BU	○	EthSwch - L+	BU	○	TB7 (24VDC)		○	BU	C1-2		○	BN	+VB-1	○	BU	PLC X10-L+
HMI X80-M	BU/WH	○	TB100ohm-BOT	BU/WH	○	EthSwch - GND	BU/WH	○	TB8 (COM)		○				○	BU/WH	PLC X19- 0-	○	BU/WH	PLC X10-M
FIELD WIRE-12		○	FIELD WIRE-14		○	FIELD WIRE-11/13		○	COMMON ALARM SOLID STATE MODULE						○	WH	(N) TB	○	RD	PLC X12-.5
TB3-Bottom	BK	○	0.25 Amp Thermal Fuse (OPTIONAL)															○	BK	BM1-L
PLC1																				
TB7-Top	BU	○	ETHERNET SWITCH (OPTIONAL)																	
TB8-Top	BU/WH	○																		
TB2-Bottom	GN/YE	○																		

Horizontal Jumper

Vertical Jumper

Optional

ID# 0001218

CAT: 02S

SAP:

FINISH

MATERIAL

INV. CONTROLLED:

SERIAL TRACKED:

DRAWN BY: NBS 9/13/18

TITLE: XCp Wiring Diagram

DESCRIPTION: Wiring diagram for heatless desiccant dryers.

SHEET 6 OF 6

SCALE:

SIZE: B

REVISION: F.02

UNLESS OTHERWISE SPECIFIED:
DIMENSIONS ARE IN INCHES
TOLERANCES:
LINEAR ±1/4
ANGULAR ±2
DENOTES INSPECTION DIM
DO NOT SCALE DRAWING

900 Great SW Pkwy
Atlanta, GA 30336
Ph: (800) 235-6797
Fax: (404) 629-6666
www.bekousa.com
BEKO TECHNOLOGIES CORP

PROPRIETARY AND CONFIDENTIAL
THE INFORMATION CONTAINED IN THIS DRAWING IS THE SOLE PROPERTY OF BEKO TECHNOLOGIES CORP. ANY REPRODUCTION IN PART OR AS A WHOLE WITHOUT THE WRITTEN PERMISSION OF THE AFOREMENTIONED IS PROHIBITED.